INTRODUCTION TO I2C COMMUNICATION

I2C combines the best features of SPI and UARTs. With I2C, you can connect multiple slaves to a single master (like SPI) and you can have multiple masters controlling single, or multiple slaves. This is really useful when you want to have more than one microcontroller logging data to a single memory card or displaying text to a single LCD.

I2C or IIC (Inter-Integrated Circuit), is a serial communication bus invented in 1982 by Philips Semiconductors.

Like UART communication, I2C only uses two wires to transmit data between devices:

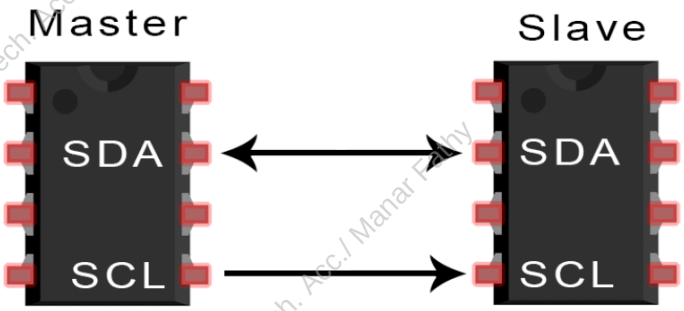

SDA (Serial Data) – The line for the master and slave to send and receive data.

SCL (Serial Clock) – The line that carries the clock signal.

I2C is a serial communication protocol, so data is transferred bit by bit along a single wire (the SDA line).

Like SPI, I2C is synchronous, so the output of bits is synchronized to the sampling of bits by a clock signal shared between the master and the slave. The clock signal is always controlled by the master.

Wires Used	2
Maximum Speed	Standard mode= 100 kbps
	Fast mode= 400 kbps
	High speed mode= 3.4 Mbps
	Ultra fast mode= 5 Mbps
Synchronous or Asynchronous?	Synchronous
Serial or Parallel?	Serial
Max # of Masters	Unlimited
Max # of Slaves	1008

HOW I2C WORKS

With I2C, data is transferred in *messages*. Messages are broken up into *frames* of data. Each message has an address frame that contains the binary address of the slave, and one or more data frames that contain the data being transmitted. The message also includes start and stop conditions, read/write bits, and ACK/NACK bits between each data frame:

Tech. Acc./ Manar Fathy

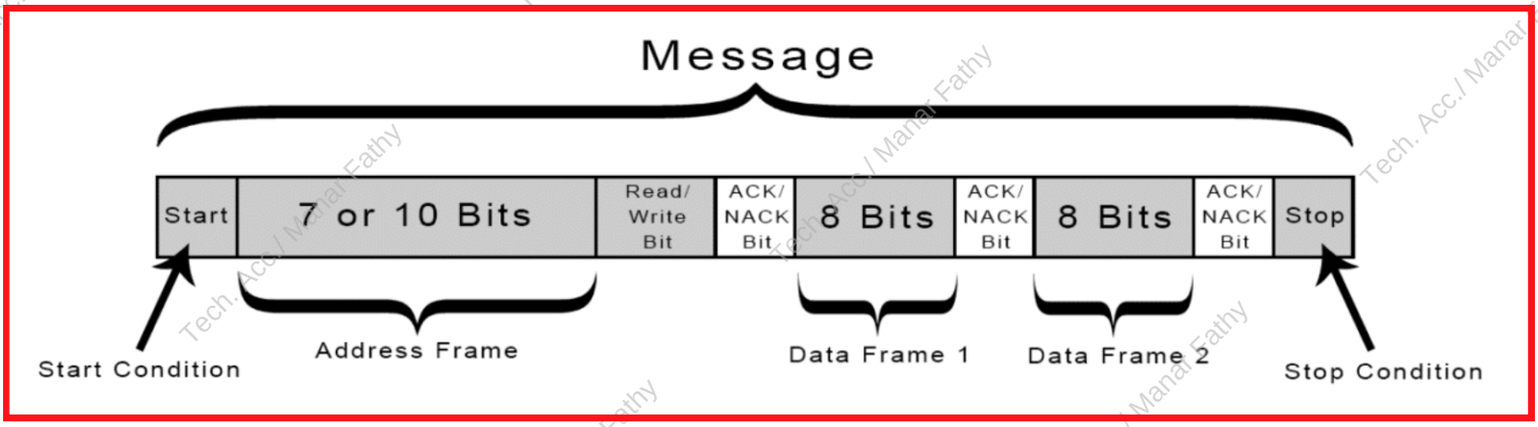

Start Condition: The SDA line switches from a high voltage level to a low voltage level *before* the SCL line switches from high to low.

Stop Condition: The SDA line switches from a low voltage level to a high voltage level *after* the SCL line switches from low to high.

Address Frame: A 7 or 10 bit sequence unique to each slave that identifies the slave when the master wants to talk to it.

Read/Write Bit: A single bit specifying whether the master is sending data to the slave (low voltage level) or requesting data from it (high voltage level).

ACK/NACK Bit: Each frame in a message is followed by an acknowledge/no-acknowledge bit. If an address frame or data frame was successfully received, an ACK bit is returned to the sender from the receiving device.

ADDRESSING

I2C doesn't have slave select lines like SPI, so it needs another way to let the slave know that data is being sent to it, and not another slave. It does this by *addressing*. The address frame is always the first frame after the start bit in a new message.

The master sends the address of the slave it wants to communicate with to every slave connected to it. Each slave then compares the address sent from the master to its own address. If the address matches, it sends a low voltage ACK bit back to the master. If the address doesn't match, the slave does nothing and the SDA line remains high.

READ/WRITE BIT

The address frame includes a single bit at the end that informs the slave whether the master wants to write data to it or receive data from it. If the master wants to send data to the slave, the read/write bit is a low voltage level. If the master is requesting data from the slave, the bit is a high voltage level.

THE DATA FRAME

After the master detects the ACK bit from the slave, the first data frame is ready to be sent.

The data frame is always 8 bits long, and sent with the most significant bit first. Each data frame is immediately followed by an ACK/NACK bit to verify that the frame has been received successfully. The ACK bit must be received by either the master or the slave (depending on who is sending the data) before the next data frame can be sent.

After all of the data frames have been sent, the master can send a stop condition to the slave to halt the transmission. The stop condition is a voltage transition from low to high on the SDA line after a low to high transition on the SCL line, with the SCL line remaining high.

STEPS OF I2C DATA TRANSMISSION

1. The master sends the start condition to every connected slave by switching the SDA line from a high voltage level to a low voltage level *before* switching the SCL line from high to low:

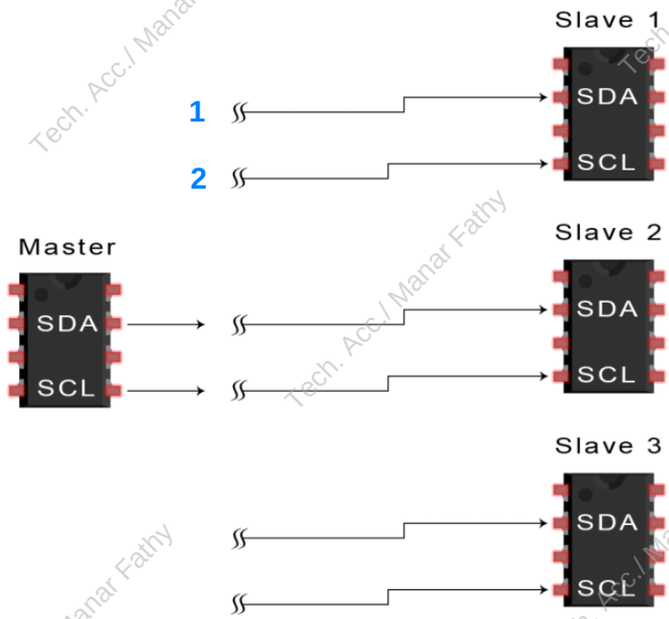

2. The master sends each slave the 7 or 10 bit address of the slave it wants to communicate with, along with the read/write bit:

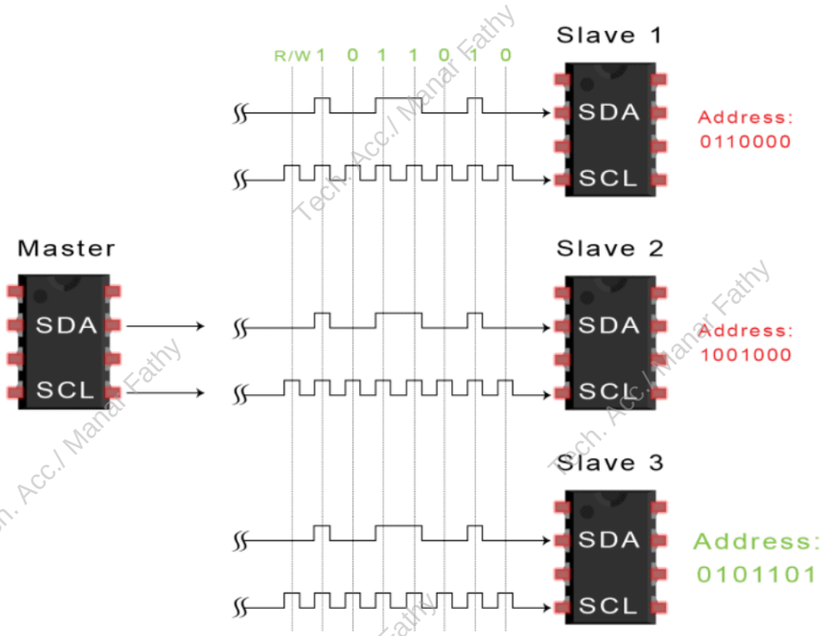

3. Each slave compares the address sent from the master to its own address. If the address matches, the slave returns an ACK bit by pulling the SDA line low for one bit. If the address from the master does not match the slave's own address, the slave leaves the SDA line high.

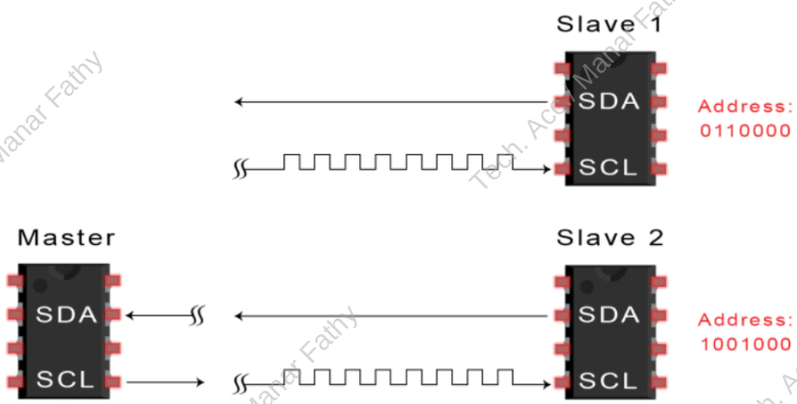

Tech. Acc./ Manar Fathy

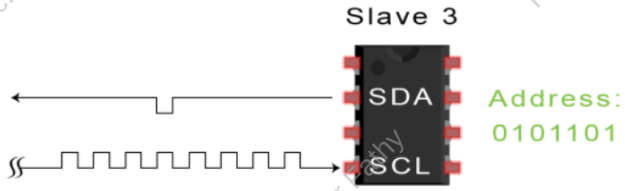

4. The master sends or receives the data frame:

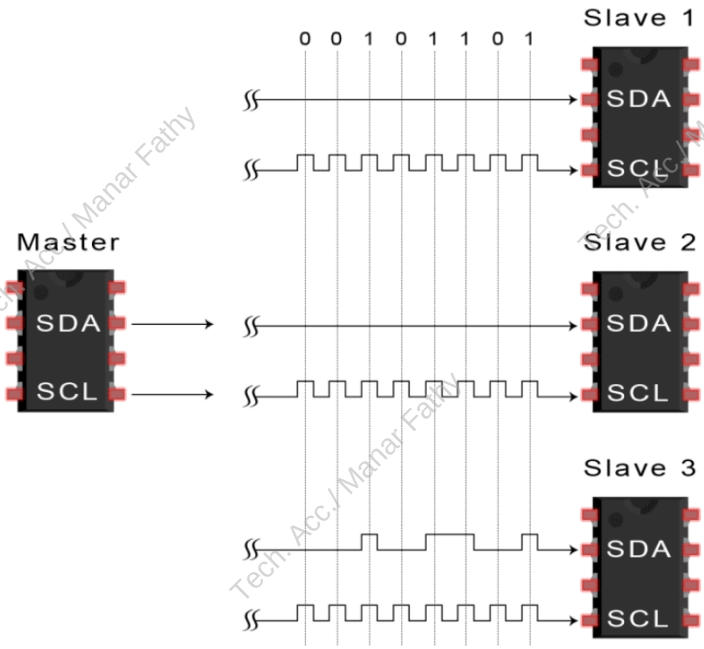

5. After each data frame has been transferred, the receiving device returns another ACK bit to the sender to acknowledge successful receipt of the frame:

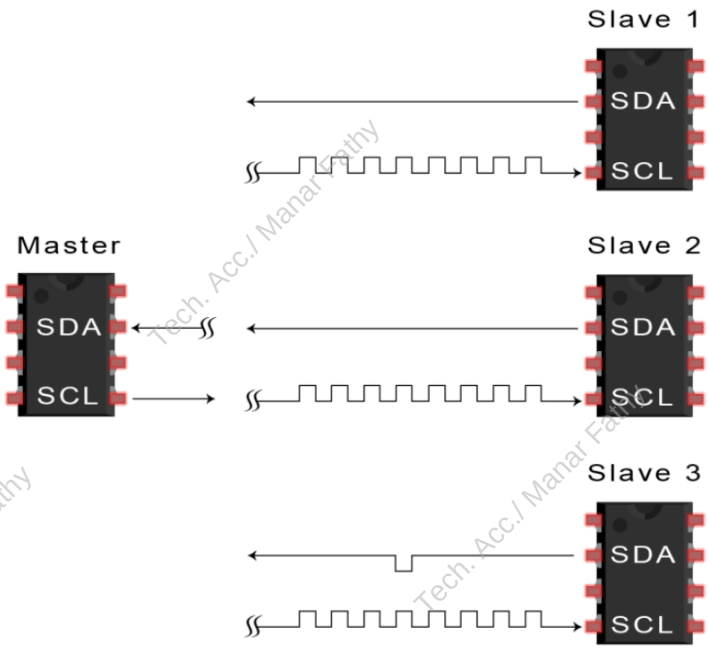

6. To stop the data transmission, the master sends a stop condition to the slave by switching SCL high before switching SDA high:

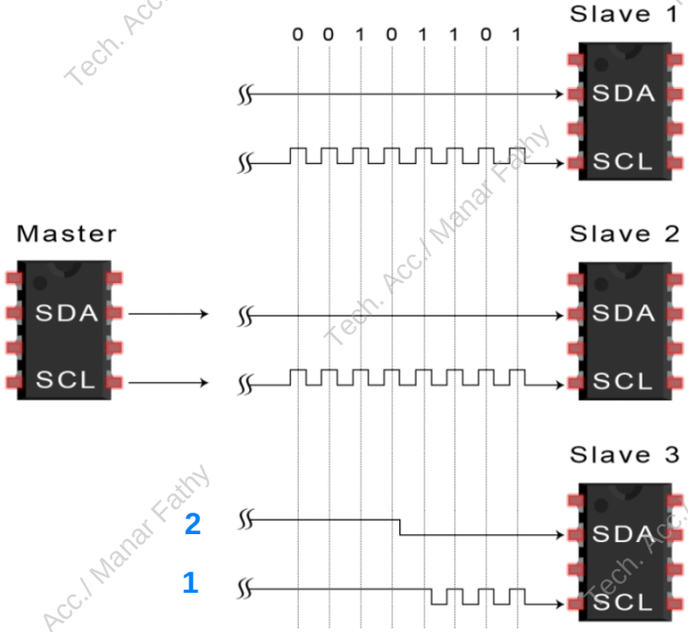

SINGLE MASTER WITH MULTIPLE SLAVES

Because I2C uses addressing, multiple slaves can be controlled from a single master. With a 7 bit address, 128 (2^7) unique address are available. Using 10 bit addresses is uncommon, but provides 1,024 (2^{10}) unique addresses. To connect multiple slaves to a single master, wire them like this, with 4.7K Ohm pull-up resistors connecting the SDA and SCL lines to Vcc:

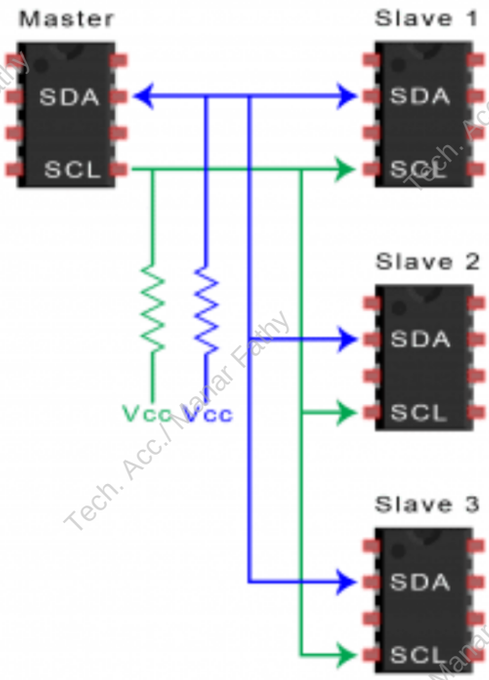

MULTIPLE MASTERS WITH MULTIPLE SLAVES

Multiple masters can be connected to a single slave or multiple slaves. The problem with multiple masters in the same system comes when two masters try to send or receive data at the same time over the SDA line. To solve this problem, each master needs to detect if the SDA line is low or high before transmitting a message. If the SDA line is low, this means that another master has control of the bus, and the master should wait to send the message. If the SDA line is high, then it's safe to transmit the message. To connect multiple masters to multiple slaves, use the following diagram, with 4.7K Ohm pull-up resistors connecting the SDA and SCL lines to Vcc:

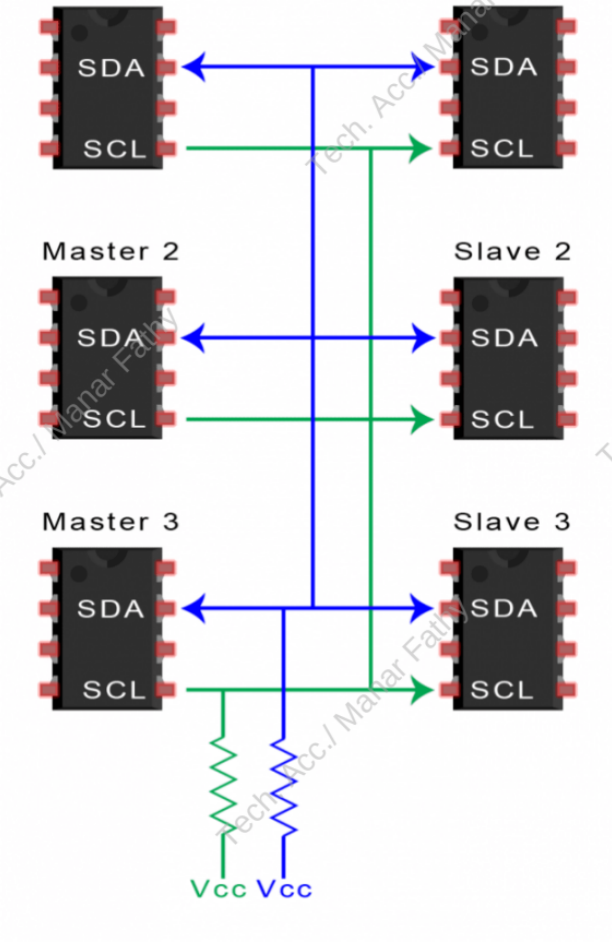

ADVANTAGES AND DISADVANTAGES OF I2C

There is a lot to I2C that might make it sound complicated compared to other protocols, but there are some good reasons why you may or may not want to use I2C to connect to a particular device:

ADVANTAGES

- Only uses two wires
- Supports multiple masters and multiple slaves
- ACK/NACK bit gives confirmation that each frame is transferred successfully
- Hardware is less complicated than with UARTs
- Well known and widely used protocol

DISADVANTAGES

- Slower data transfer rate than SPI
- The size of the data frame is limited to 8 bits
- More complicated hardware needed to implement than SPI

Tech. Acc./ Manar Fathy

INTRODUCTION TO SPI COMMUNICATION

SPI is a common communication protocol used by many different devices. For example, SD card modules, RFID card reader modules, and 2.4 GHz wireless transmitter/receivers all use SPI to communicate with microcontrollers.

One unique benefit of SPI is the fact that data can be transferred without interruption. Any number of bits can be sent or received in a continuous stream. With I2C and UART, data is sent in packets, limited to a specific number of bits. Start and stop conditions define the beginning and end of each packet, so the data is interrupted during transmission.

Devices communicating via SPI are in a master-slave relationship. The master is the controlling device (usually a microcontroller), while the slave (usually a sensor, display, or memory chip) takes instruction from the master. The simplest configuration of SPI is a single master, single slave system, but one master can control more than one slave (more on this below).

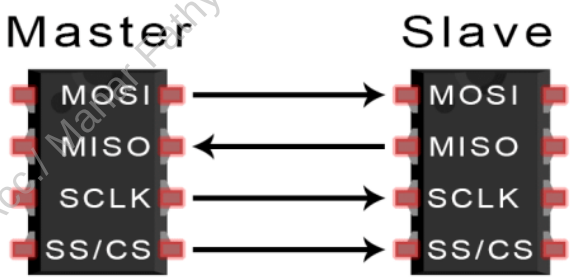

MOSI (Master Output/Slave Input) – Line for the master to send data to the slave.

MISO (Master Input/Slave Output) – Line for the slave to send data to the master.

SCLK (Clock) – Line for the clock signal.

SS/CS (Slave Select/Chip Select) – Line for the master to select which slave to send data to.

Wires Used	4
Maximum Speed	Up to 10 Mbps
Synchronous or Asynchronous?	Synchronous
Serial or Parallel?	Serial
Max # of Masters	1
Max # of Slaves	Theoretically unlimited*

*In practice, the number of slaves is limited by the load capacitance of the system, which reduces the ability of the master to accurately switch between voltage levels.

Tech. Acc./ Manar Fathy

HOW SPI WORKS

THE CLOCK

The clock signal synchronizes the output of data bits from the master to the sampling of bits by the slave. One bit of data is transferred in each clock cycle, so the speed of data transfer is determined by the frequency of the clock signal. SPI communication is always initiated by the master since the master configures and generates the clock signal.

Any communication protocol where devices share a clock signal is known as *synchronous*. SPI is a synchronous communication protocol. There are also *asynchronous* methods that don't use a clock signal. For example, in UART communication, both sides are set to a pre-configured baud rate that dictates the speed and timing of data transmission.

The clock signal in SPI can be modified using the properties of *clock polarity* and *clock phase*. These two properties work together to define when the bits are output and when they are sampled. Clock polarity can be set by the master to allow for bits to be output and sampled on either the rising or falling edge of the clock cycle. Clock phase can be set for output and sampling to occur on either the first edge or second edge of the clock cycle, regardless of whether it is rising or falling.

SLAVE SELECT

The master can choose which slave it wants to talk to by setting the slave's CS/SS line to a low voltage level. In the idle, non-transmitting state, the slave select line is kept at a high voltage level. Multiple CS/SS pins may be available on the master, which allows for multiple slaves to be wired in parallel. If only one CS/SS pin is present, multiple slaves can be wired to the master by daisy-chaining.

MULTIPLE SLAVES

SPI can be set up to operate with a single master and a single slave, and it can be set up with multiple slaves controlled by a single master. There are two ways to connect multiple slaves to the master. If the master has multiple slave select pins, the slaves can be wired in parallel like this:

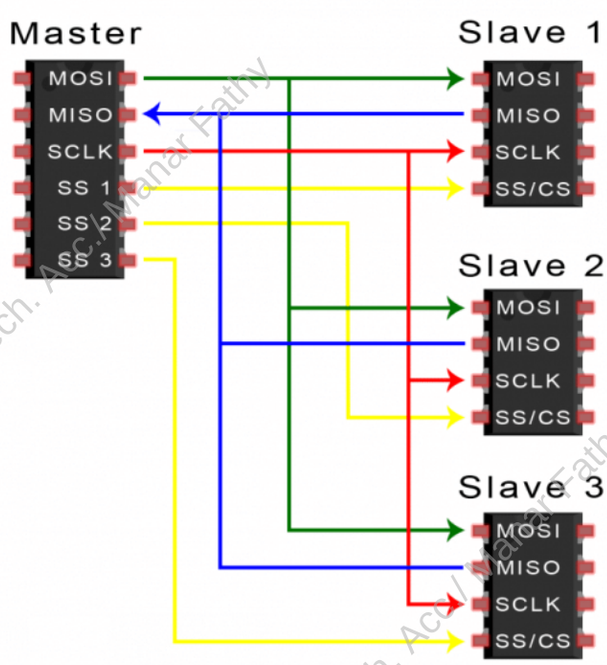

Tech. Acc./ Manar Fathy

If only one slave select pin is available, the slaves can be daisy-chained like this:

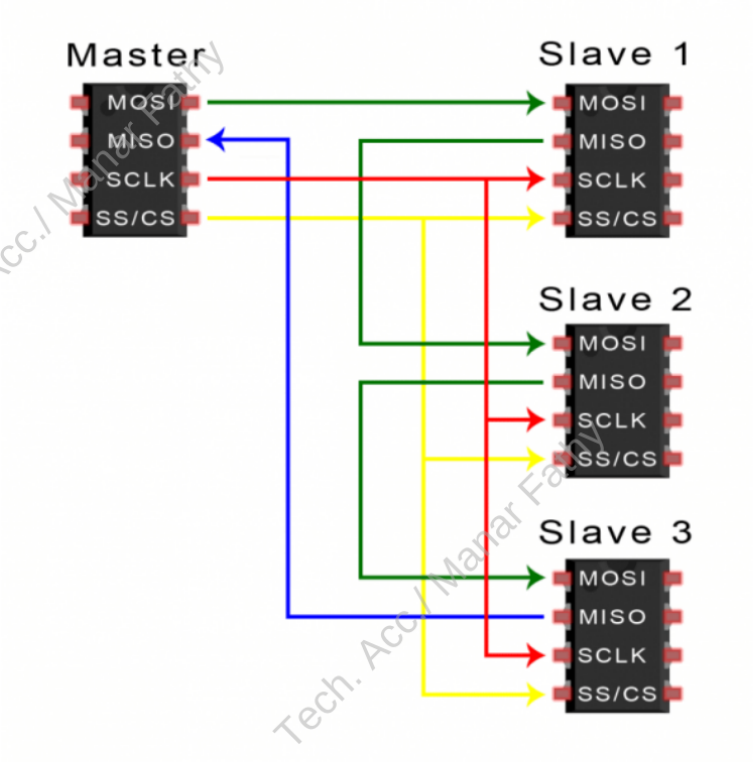

MOSI AND MISO

The master sends data to the slave bit by bit, in serial through the MOSI line. The slave receives the data sent from the master at the MOSI pin. Data sent from the master to the slave is usually sent with the most significant bit first.

The slave can also send data back to the master through the MISO line in serial. The data sent from the slave back to the master is usually sent with the least significant bit first.

STEPS OF SPI DATA TRANSMISSION

1. The master outputs the clock signal:

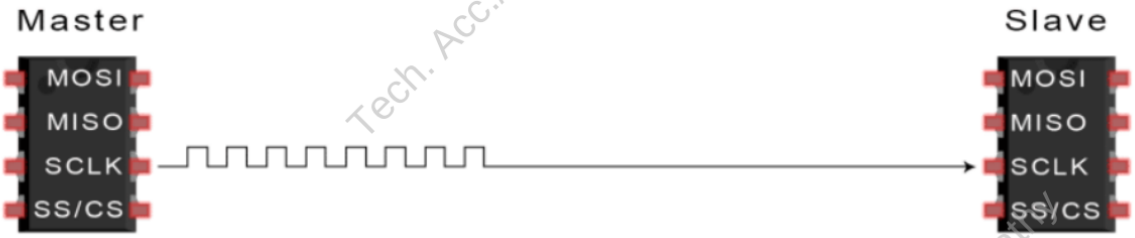

2. The master switches the SS/CS pin to a low voltage state, which activates the slave:

Tech. Acc./ Manar Fathy

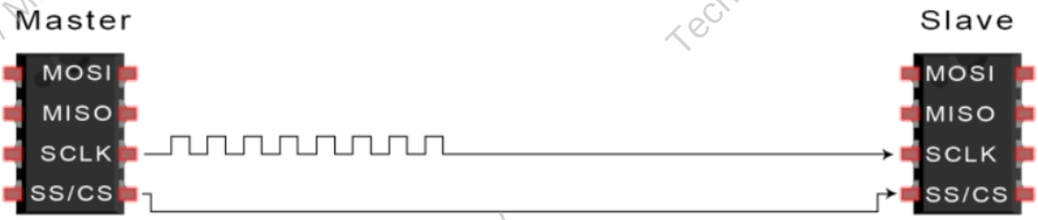

3. The master sends the data one bit at a time to the slave along the MOSI line. The slave reads the bits as they are received:

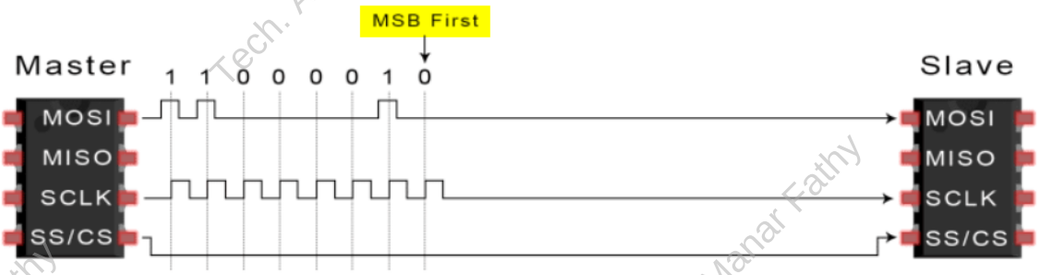

4. If a response is needed, the slave returns data one bit at a time to the master along the MISO line. The master reads the bits as they are received:

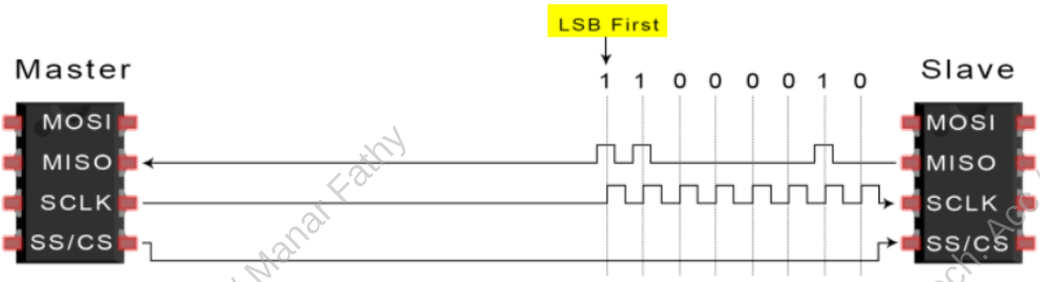

ADVANTAGES AND DISADVANTAGES OF SPI

There are some advantages and disadvantages to using SPI, and if given the choice between different communication protocols, you should know when to use SPI according to the requirements of your project:

ADVANTAGES

- No start and stop bits, so the data can be streamed continuously without interruption
- No complicated slave addressing system like I2C
- Higher data transfer rate than I2C (almost twice as fast)
- Separate MISO and MOSI lines, so data can be sent and received at the same time

DISADVANTAGES

- Uses four wires (I2C and UARTs use two)
- No acknowledgement that the data has been successfully received (I2C has this)
- No form of error checking like the parity bit in UART
- Only allows for a single master

Tech. Acc./ Manar Fathy